INTEGRATION

STS Defence provides Integration, incorporating a through-life concept, for a wide range of engineering activities within the Defence environment. Initial design concepts are developed into fully functional and documented installations.

From an initial site survey STS can provide costs for materials and labour as part of a response to tender. Following approval STS will prepare and manage the documentation and drawings necessary for the installation to take place.

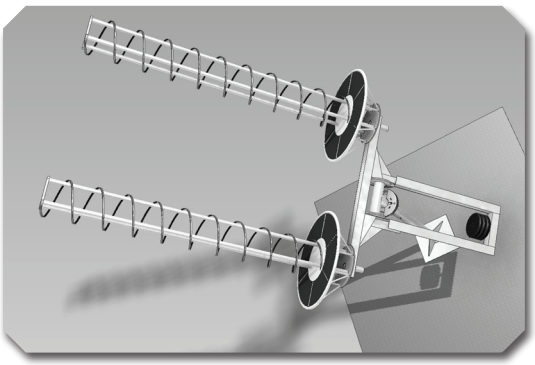

Key capabilities include:

- Special requirements identification
- Site investigation and survey reports
- Work packages, technical specs & cable schedules
- Mechanical & electrical drawings
- Project Safety Engineer
- Project safety case
- Estimating
- Trials and work inspections

Technical Specifications and Installation Guidance Information are tailored to meet the requirements of Defence Standards, Sea Systems Controllerate Publications (SSCPs) and Joint Service Publications (JSPs). Documentation is presented in hard or soft copy formats (Word, PDF or Web Viewing software).

The STS Safety Engineer is responsible for the identification and implementation of all safety aspects, including a project safety case.

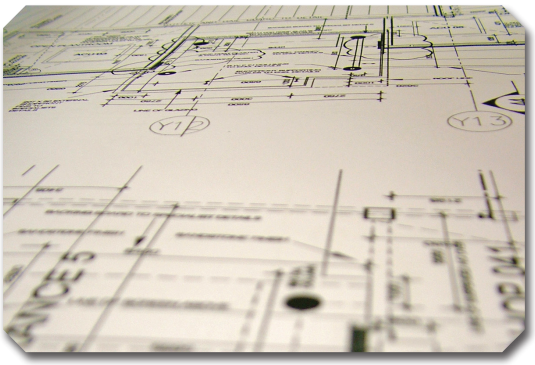

STSdefence ENGINEERING SERVICES

Nadcap Electronics

ADS SC21 21st century supply chains

Tel: +44 (0) 2392 584 222
E-mail: sales@sts-defence.com
Web: www.sts-defence.com

Mumby Road | Gosport | Hampshire | PO12 1AF | United Kingdom